STANDARD FEATURES

HESTAN

PASTA COOKER

- High-performance 45,000 Btu/hour or 80,000Btu/hour gas-fired burner systems
- Heavy duty, stainless steel, fully welded single chamber construction with 12 gallon capacity
- 80,000 Btu/hour models also include a Hi-Limit gas safety system to protect the tank in low water scenarios.
- Triple fiberglass insulation on all sides of chamber
- Standing pilot with safety thermocouple. Absence of pilot flame will cause the thermocouple to drop out and shutoff gas supply for safety.
- Piezo-electric ignition system to ignite the standing pilot. No need for an electrical supply.
- Top mounted water faucet to replenish water loss

Fully Welded Stainless Steel Tank

Front Inter-Plumb Manifold

Pasta Baskets

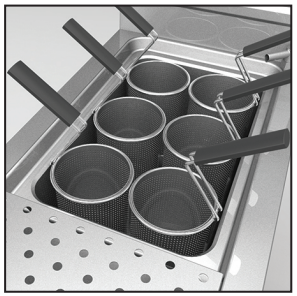

- Overflow drain positioned perfectly for easy skim of starch, reducing build-up
- Front accessible stainless steel cabinet door for easy control, cleaning and service access.
- Basket perforations designed to prevent even the smallest types of pasta from slipping out of the basket
- Seamless stainless steel baskets
- Stainless front, sides, back and bottom
- Heavy gauge welded body construction
- ½" water connection
- 1-1/4" front gas manifold
- 1" NPT drain connection
- 6" height adjustable legs (4)

Model number as shown HPCL18

AUTODESK REVIT

OPTIONS

- Colors (contact sales department for available colors)
- Customizable Marquise accented™ control panel (*Patented* / contact sales department for available options)
- Extended plate shelf (6" or 8")
- Belly bar with 1" space or extended to accommodate 1/9 condiment pans
- Manifold cap and cover
- Risers : Tall or Mid
- Curb base

Note: Cheesemelter, Salamander, Casters, Island Trim, and shelves are not recommended for Pasta Cookers as a safety precaution

PASTA COOKER

www.hestancommercial.com phone 888.905.7463 3375 E. La Palma Ave., Anaheim, CA 92806

HESTAN

PASTA COOKER

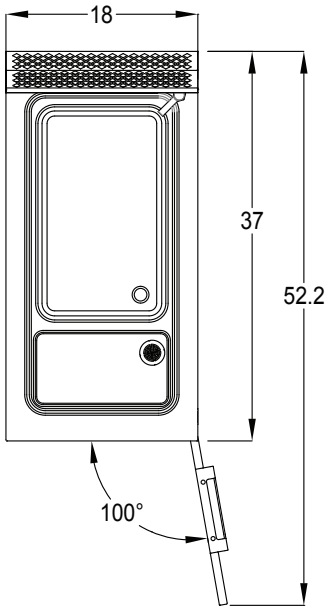

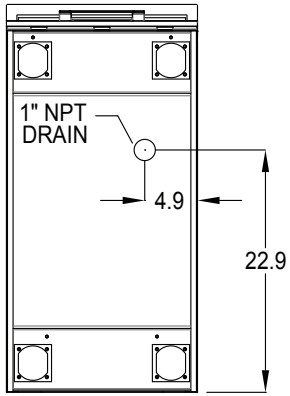

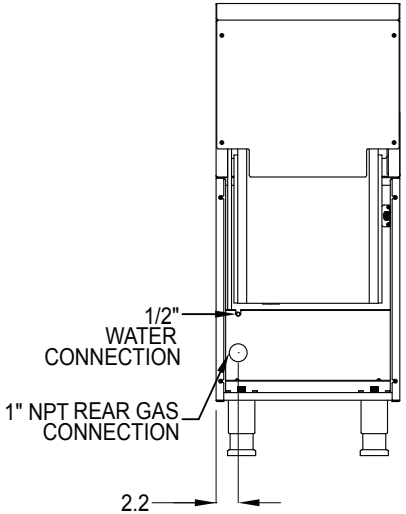

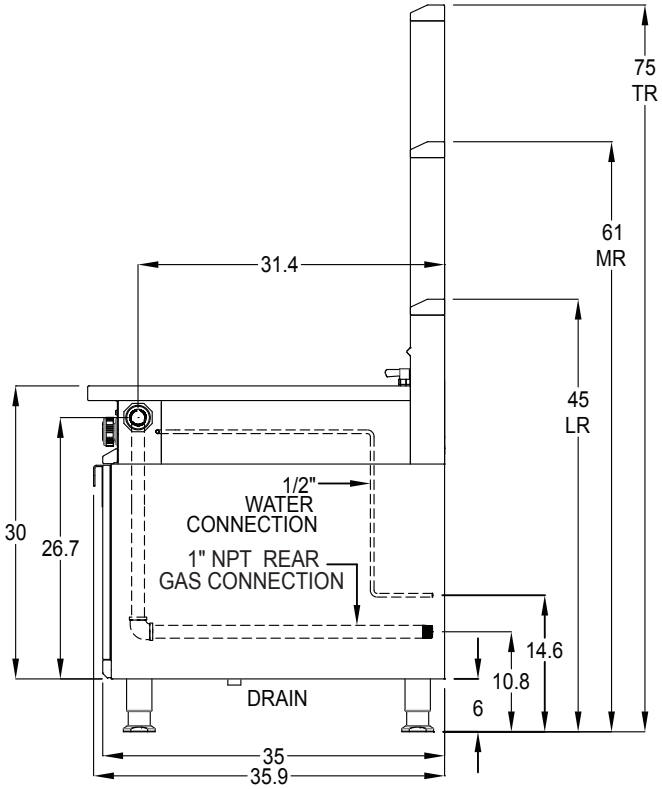

Mode l	Description	Gas [Btu/HR]	Approx SHP WT	Capacity (Gal)
HPCL18	18" wide Pasta Cooker (LH)	45,000	250	12
HPCR18	18" wide Pasta Cooker (RH)	45,000	250	12
HPCHL18	18" wide Pasta Cooker (LH) with Low Water Safety	80,000	250	12
HPCHR18	18" wide Pasta Cooker (RH) with Low Water Safety	80,000	250	12

Note: Hestan Commercial products are not approved or recommended for residential use. Hestan Commercial Corporation reserves the right to change materials and specifications without notice. Specify type of gas when ordering. Specify altitude when above 2,000 ft.

ELECTRICAL : No electrical requirement.

GAS : 1" NPT gas connection.Minimum gas supply is 7" water column for natural gas and 11" for propane. Operating pressure at the manifold is 4" water column for natural gas and 10" for propane. All units require a regulated gas supply.

WATER : ½" water connection. Water pressure should be between 14.5 PSI and 72.5 PSI. 1" NPT drain connection.

VENTILATION : The product is required to be installed under an exhaust hood.

Intertek

CONTACT US: www.hestancommercial.com phone 888.905.7463 3375 E. La Palma Ave., Anaheim, CA 92806